# ELEC4505 Power System Analysis

## Assignment 1—Power Flow Analysis

**Deadline:** 11:59PM, the 23rd April 2026 AWST.
**Weight:** 15%

**Given the 7-generator power system information (see appendix A~D in page 2 to page 5), please find/analyse:**

1. Admittance matrix of the power system;
2. Power flow with Gauss-Seidel method;
3. Power flow with Newton-Raphson method;
4. Total loss and overall power efficiency; and
5. Change generator data and try to reduce the total loss, thus increasing the power efficiency.

**Notes:**

a. Refer to MATPOWER manual at http://www.pserc.cornell.edu/matpower/manual.pdf for functions that have not been included in class notes.
b. For item 1, use MATPOWER to find the admittance matrix of the 7-generator power system. Then write a MATLAB script to calculate the admittance matrix of the 7-generator power system. Compare and analyse the admittance matrixes generated from the MATPOWER and MATLAB script. Use spreadsheets to store the values of admittance matrixes. Submit matpower data file, spreadsheets and all scripts along with your assignment report.
c. For items 2 & 3. Simulate the power system in MATPOWER, solve power flow using these two methods, collect simulation data and conduct result analysis. Finally, compare and document the simulation results obtained from both methods. Comment on the performance of these two methods and explain the difference between them.
d. For item 5, try at least 20 different generation capacities of different generators. Tabulate your simulation results and report the loss and efficiency for each generation capacity.
e. For all items, you must introduce the background knowledge, describe your approach, document the simulation and/or calculation results, and conduct a result analysis in your group report. All MATPOWER and MATLAB scripts used to generate results must be fully commented and submitted along with your report. Please note that a "readme.txt" file is essential for the marker to understand how to execute your scripts and codes.
f. Refer to “Assignment 1 FAQ” section under “Assignment One” folder on LMS for more information.

**Purpose of the assignment:**

(1) Review the basics of power flow fundamentals,
(2) Understand power system components and configurations,
(3) Get familiarized with MATLAB coding environment, and
(4) Develop skills and comprehensions of the steady-state analysis tool—MATPOWER.

**Submission:**

(1) Each group is required to write a concise and clear report in English and submit it online via LMS before the due date. Hardcopy submissions are not required.
(2) The contributions of each individual student must be clearly indicated in front of the report. A complete and signed assignment coversheet must be attached to the group submission.

(3) The report should not exceed 20 pages, and your answers should be neat, clear, and easy to read.

(4) Submit the team report and other requested files on LMS before the due time. The submission portal is available under the "content"→"Assessments"→"Assignment 1 (15%)"→"Assignment 1 Submission Portal" on LMS. You are allowed to submit up to three versions, but only the final attempt will be marked. If your team submits the final version report after the due time, it will be assessed as a late submission.

APPENDIX A: The topology of 7 generator power system is shown in the following schematic:

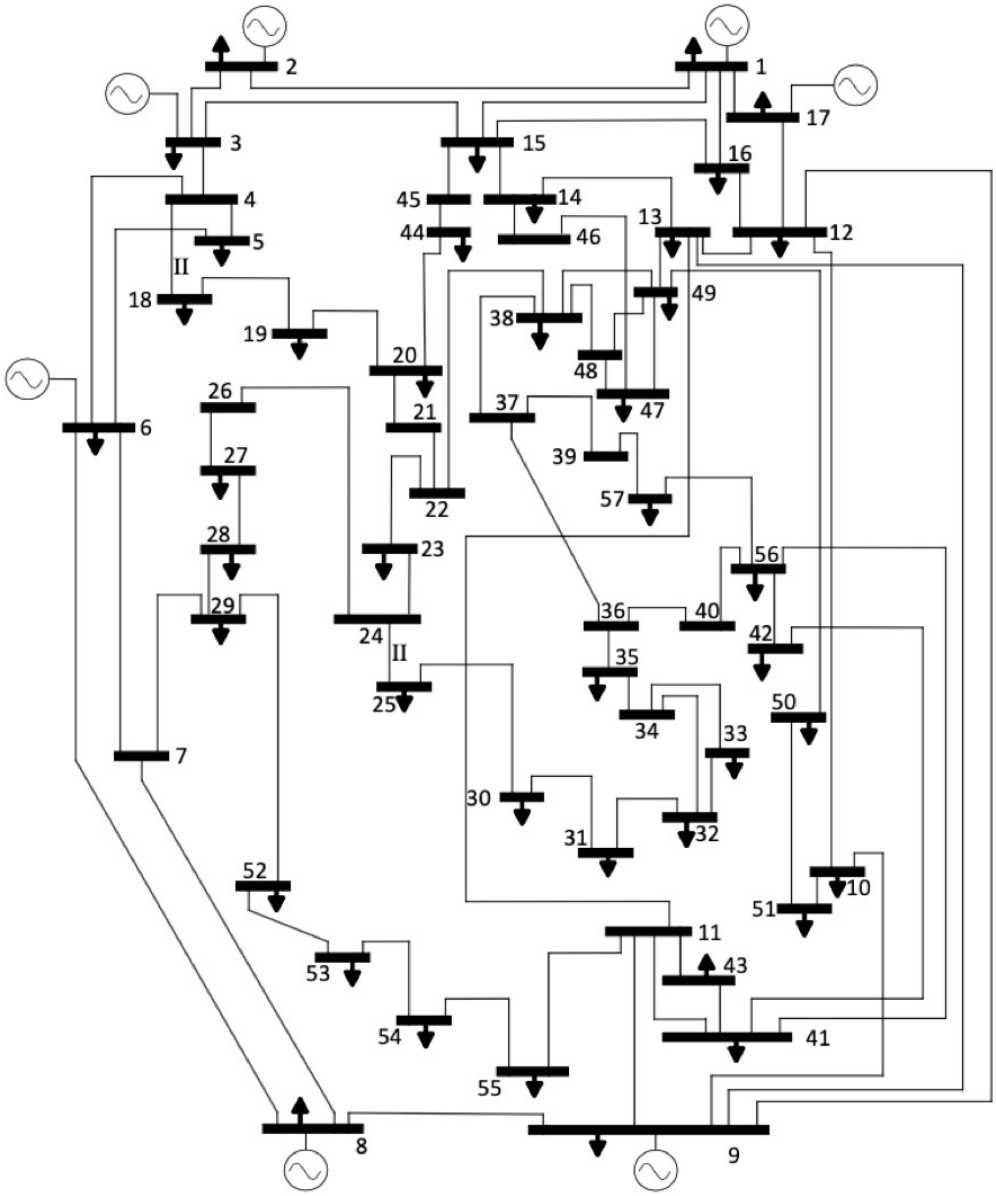


Fig. 1- 16-machine, 5-area test system topology

APPENDIX B: Power system transmission line data is shown in the following table:

| Line No. | From Bus | To Bus | Line Impedance | | Half Line Charging Susceptance (p.u.) |
|---|---|---|---|---|---|
| | | | Resistance (p.u.) | Reactance (p.u.) | |
| 1 | 1 | 2 | 0.0369 | 0.132 | 0.0129 |
| 2 | 2 | 3 | 0.0258 | 0.085 | 0.0409 |
| 3 | 3 | 4 | 0.0648 | 0.0366 | 0.019 |
| 4 | 4 | 5 | 0.0481 | 0.028 | 0.0645 |
| 5 | 4 | 6 | 0.043 | 0.148 | 0.0174 |
| 6 | 6 | 7 | 0.0132 | 0.0434 | 0.0055 |
| 7 | 6 | 8 | 0.0339 | 0.173 | 0.0235 |
| 8 | 8 | 9 | 0.018 | 0.0813 | 0.0108 |
| 9 | 9 | 10 | 0.0178 | 0.1679 | 0.022 |
| 10 | 9 | 11 | 0.0454 | 0.0848 | 0.0109 |
| 11 | 9 | 12 | 0.0238 | 0.295 | 0.0386 |
| 12 | 9 | 13 | 0.0162 | 0.158 | 0.0203 |
| 13 | 13 | 14 | 0.0269 | 0.0869 | 0.0115 |
| 14 | 16 | 15 | 0.102 | 0.02 | 0.0138 |
| 15 | 1 | 15 | 0.0625 | 0.091 | 0.0494 |
| 16 | 1 | 16 | 0.0298 | 0.206 | 0.0273 |
| 17 | 1 | 17 | 0.0112 | 0.108 | 0.0143 |
| 18 | 3 | 15 | 0.0083 | 0.053 | 0.0272 |
| 19 | 4 | 18 | 0 | 0.555 | 0 |
| 20 | 4 | 18 | 0 | 0.43 | 0 |

| Line No. | From Bus | To Bus | Line Impedance | | Half Line Charging Susceptance (p.u.) |
|---|---|---|---|---|---|
| | | | Resistance (p.u.) | Reactance (p.u.) | |
| 21 | 5 | 6 | 0.0302 | 0.0641 | 0.0062 |
| 22 | 7 | 8 | 0.0099 | 0.0505 | 0.0274 |
| 23 | 10 | 12 | 0.0277 | 0.1262 | 0.0164 |
| 24 | 11 | 13 | 0.0223 | 0.0732 | 0.0094 |
| 25 | 12 | 13 | 0.052 | 0.078 | 0.0016 |
| 26 | 12 | 16 | 0.043 | 0.0537 | 0.0008 |
| 27 | 12 | 17 | 0.0223 | 0.685 | 0.0302 |
| 28 | 14 | 15 | 0.0171 | 0.0547 | 0.0074 |
| 29 | 18 | 19 | 0.461 | 0.685 | 0 |
| 30 | 19 | 20 | 0.283 | 0.434 | 0 |
| 31 | 21 | 20 | 0 | 0.7767 | 0 |
| 32 | 21 | 22 | 0.0736 | 0.117 | 0 |
| 33 | 22 | 23 | 0.0099 | 0.0152 | 0 |
| 34 | 23 | 24 | 0.166 | 0.256 | 0.0042 |
| 35 | 24 | 25 | 0 | 1.182 | 0 |
| 36 | 24 | 25 | 0 | 1.23 | 0 |
| 37 | 24 | 26 | 0 | 0.0473 | 0 |
| 38 | 26 | 27 | 0.165 | 0.254 | 0 |
| 39 | 27 | 28 | 0.0618 | 0.0954 | 0 |
| 40 | 28 | 29 | 0.0418 | 0.0587 | 0 |

| Line No. | From Bus | To Bus | Line Impedance | | Half Line Charging Susceptance (p.u.) |
|---|---|---|---|---|---|
| | | | Resistance (p.u.) | Reactance (p.u.) | |
| 41 | 7 | 29 | 0 | 0.0648 | 0 |
| 42 | 25 | 30 | 0.135 | 0.202 | 0 |
| 43 | 30 | 31 | 0.326 | 0.497 | 0 |
| 44 | 31 | 32 | 0.507 | 0.755 | 0 |
| 45 | 32 | 33 | 0.0392 | 0.036 | 0 |
| 46 | 34 | 32 | 0 | 0.953 | 0 |
| 47 | 34 | 35 | 0.0178 | 0.058 | 0.0302 |
| 48 | 35 | 36 | 0.023 | 0.068 | 0.0016 |
| 49 | 36 | 37 | 0.0182 | 0.0233 | 0 |
| 50 | 37 | 38 | 0.0834 | 0.129 | 0.0024 |
| 51 | 37 | 39 | 0.0239 | 0.0379 | 0 |
| 52 | 36 | 40 | 0.1442 | 0.187 | 0 |
| 53 | 22 | 38 | 0.0762 | 0.0984 | 0 |
| 54 | 11 | 41 | 0 | 0.749 | 0 |
| 55 | 41 | 42 | 0.207 | 0.352 | 0 |
| 56 | 41 | 43 | 0 | 0.412 | 0 |
| 57 | 38 | 20 | 0.0289 | 0.0585 | 0.001 |
| 58 | 15 | 45 | 0 | 0.1042 | 0 |
| 59 | 14 | 46 | 0 | 0.0735 | 0 |
| 60 | 46 | 47 | 0.0397 | 0.179 | 0.0238 |

| Line No. | From Bus | To Bus | Line Impedance | | Half Line Charging Susceptance (p.u.) |
|---|---|---|---|---|---|
| | | | Resistance (p.u.) | Reactance (p.u.) | |
| 61 | 47 | 48 | 0.029 | 0.0366 | 0 |
| 62 | 48 | 49 | 0.0651 | 0.1009 | 0.001 |
| 63 | 49 | 50 | 0.03 | 0.0466 | 0 |
| 64 | 50 | 51 | 0.0192 | 0.0295 | 0 |
| 65 | 10 | 51 | 0 | 0.0712 | 0 |
| 66 | 13 | 49 | 0 | 0.191 | 0 |
| 67 | 29 | 52 | 0.0801 | 0.128 | 0 |
| 68 | 52 | 53 | 0.1386 | 0.22 | 0 |
| 69 | 53 | 54 | 0.1878 | 0.232 | 0 |
| 70 | 54 | 55 | 0.1732 | 0.2265 | 0 |
| 71 | 11 | 43 | 0 | 0.153 | 0 |
| 72 | 44 | 45 | 0.0624 | 0.1242 | 0.002 |
| 73 | 40 | 56 | 0 | 1.195 | 0 |
| 74 | 56 | 41 | 0.553 | 0.549 | 0 |
| 75 | 56 | 42 | 0.2125 | 0.354 | 0 |
| 76 | 39 | 57 | 0 | 1.355 | 0 |
| 77 | 57 | 56 | 0.174 | 0.26 | 0 |
| 78 | 38 | 49 | 0.115 | 0.177 | 0.003 |
| 79 | 38 | 48 | 0.0312 | 0.0482 | 0 |
| 80 | 9 | 55 | 0 | 0.1205 | 0 |

APPENDIX C: The machine data and load data is shown in the following table (base: 100MVA)

| Bus No. | Voltage Mag (p.u) | Phase Angle (deg) | Gen Real Power (p.u) | Gen Reactive Power (p.u) | Load Real Power (p.u) | Load Reactive Power (p.u) | Q Min (p.u) | Q Max (p.u) |
|---|---|---|---|---|---|---|---|---|
| 1 | 1.04 | 0 | 4.78 | 1.289 | 0.55 | 0.17 | - | - |
| 2 | 1.005 | 0 | 4.5 | 0.621 | 1.5 | 0.22 | -1.4 | 2 |
| 3 | 1.015 | 0 | 3.1 | 1.285 | 3.77 | 0.24 | -0.5 | 1.55 |
| 4 | 1 | 0 | 0 | 0 | 0 | 0 | - | - |
| 5 | 1 | 0 | 0 | 0 | 0.13 | 0.04 | - | - |
| 6 | 0.98 | 0 | 0 | 0.008 | 0.75 | 0.02 | -0.08 | 0.25 |
| 7 | 1 | 0 | 0 | 0 | 0 | 0 | - | - |
| 8 | 0.98 | 0 | 0 | 0.022 | 1.21 | 0.26 | -0.03 | 0.09 |
| 9 | 1.01 | 0 | 0 | -0.008 | 0.03 | 0.88 | -0.17 | 0.5 |
| 10 | 1 | 0 | 0 | 0 | 0.05 | 0.02 | - | - |
| 11 | 1 | 0 | 0 | 0 | 0 | 0 | - | - |
| 12 | 1 | 0 | 0 | 0 | 0.42 | 0.08 | - | - |
| 13 | 1 | 0 | 0 | 0 | 0.18 | 0.023 | - | - |
| 14 | 1 | 0 | 0 | 0 | 0.105 | 0.053 | - | - |
| 15 | 1 | 0 | 0 | 0 | 0.22 | 0.05 | - | - |
| 16 | 1 | 0 | 0 | 0 | 0.43 | 0.03 | - | - |
| 17 | 0.985 | 0 | 0.4 | -0.01 | 0.41 | 0.21 | -0.1 | 0.6 |
| 18 | 1 | 0 | 0 | 0 | 0.272 | 0.098 | - | - |
| 19 | 1 | 0 | 0 | 0 | 0.033 | 0.06 | - | - |
| 20 | 1 | 0 | 0 | 0 | 0.023 | 0.01 | - | - |
| 21 | 1 | 0 | 0 | 0 | 0 | 0 | - | - |
| 22 | 1 | 0 | 0 | 0 | 0 | 0 | - | - |
| 23 | 1 | 0 | 0 | 0 | 0.063 | 0.021 | - | - |
| 24 | 1 | 0 | 0 | 0 | 0 | 0 | - | - |
| 25 | 1 | 0 | 0 | 0 | 0.063 | 0.032 | - | - |
| 26 | 1 | 0 | 0 | 0 | 0 | 0 | - | - |
| 27 | 1 | 0 | 0 | 0 | 0.093 | 0.005 | - | - |
| 28 | 1 | 0 | 0 | 0 | 0.046 | 0.023 | - | - |
| 29 | 1 | 0 | 0 | 0 | 0.17 | 0.026 | - | - |
| 30 | 1 | 0 | 0 | 0 | 0.036 | 0.018 | - | - |
| 31 | 1 | 0 | 0 | 0 | 0.058 | 0.029 | - | - |
| 32 | 1 | 0 | 0 | 0 | 0.016 | 0.008 | - | - |
| 33 | 1 | 0 | 0 | 0 | 0.038 | 0.019 | - | - |
| 34 | 1 | 0 | 0 | 0 | 0 | 0 | - | - |
| 35 | 1 | 0 | 0 | 0 | 0.06 | 0.03 | - | - |
| 36 | 1 | 0 | 0 | 0 | 0 | 0 | - | - |
| 37 | 1 | 0 | 0 | 0 | 0 | 0 | - | - |
| 38 | 1 | 0 | 0 | 0 | 0.14 | 0.07 | - | - |
| 39 | 1 | 0 | 0 | 0 | 0 | 0 | - | - |
| 40 | 1 | 0 | 0 | 0 | 0 | 0 | - | - |
| 41 | 1 | 0 | 0 | 0 | 0.063 | 0.03 | - | - |
| 42 | 1 | 0 | 0 | 0 | 0.071 | 0.044 | - | - |
| 43 | 1 | 0 | 0 | 0 | 0.02 | 0.01 | - | - |
| 44 | 1 | 0 | 0 | 0 | 0.12 | 0.018 | - | - |
| 45 | 1 | 0 | 0 | 0 | 0 | 0 | - | - |
| 46 | 1 | 0 | 0 | 0 | 0 | 0 | - | - |
| 47 | 1 | 0 | 0 | 0 | 0.297 | 0.116 | - | - |
| 48 | 1 | 0 | 0 | 0 | 0 | 0 | - | - |
| 49 | 1 | 0 | 0 | 0 | 0.18 | 0.085 | - | - |
| 50 | 1 | 0 | 0 | 0 | 0.21 | 0.105 | - | - |
| 51 | 1 | 0 | 0 | 0 | 0.18 | 0.053 | - | - |
| 52 | 1 | 0 | 0 | 0 | 0.049 | 0.022 | - | - |
| 53 | 1 | 0 | 0 | 0 | 0.2 | 0.1 | - | - |
| 54 | 1 | 0 | 0 | 0 | 0.041 | 0.014 | - | - |
| 55 | 1 | 0 | 0 | 0 | 0.068 | 0.034 | - | - |
| 56 | 1 | 0 | 0 | 0 | 0.076 | 0.022 | - | - |
| 57 | 1 | 0 | 0 | 0 | 0.067 | 0.02 | - | - |

APPENDIX D: Transformer tap setting data:

| From Bus | To Bus | Tap Setting Value (p.u.) |
|---|---|---|
| 4 | 18 | 0.895 |
| 4 | 18 | 0.98 |
| 21 | 20 | 1.012 |
| 24 | 26 | 1.012 |
| 7 | 29 | 0.958 |
| 34 | 32 | 0.957 |
| 11 | 41 | 0.955 |
| 14 | 46 | 0.92 |
| 15 | 45 | 0.955 |
| 10 | 51 | 0.93 |
| 13 | 49 | 0.967 |
| 11 | 43 | 0.895 |
| 40 | 56 | 0.978 |
| 39 | 57 | 0.94 |
| 9 | 11 | 0.98 |
| 24 | 25 | 1.043 |
| 24 | 25 | 1.04 |